Movie

Istruzioni di montaggio
Assembly instructions
Instructions de montage
Montageanleitung
Instrucciones de montaje
Инструкции по сборке мебели
組み立て説明書

Poltrona Frau
Fondata nel 1912

Movie

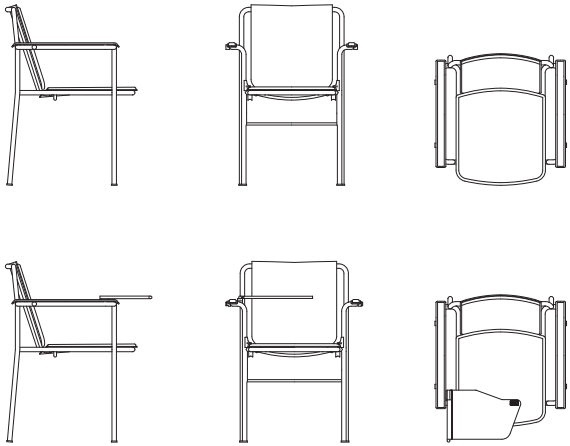

Optional

2x

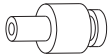

2x

4x
M6x16

1x
Ch4

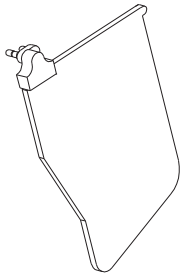

1x

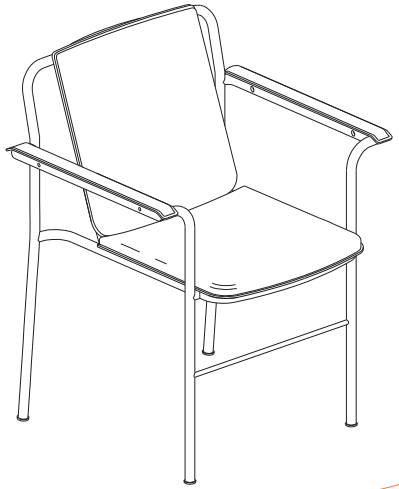

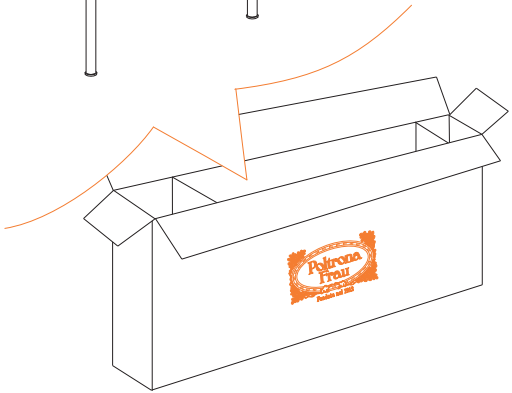

1

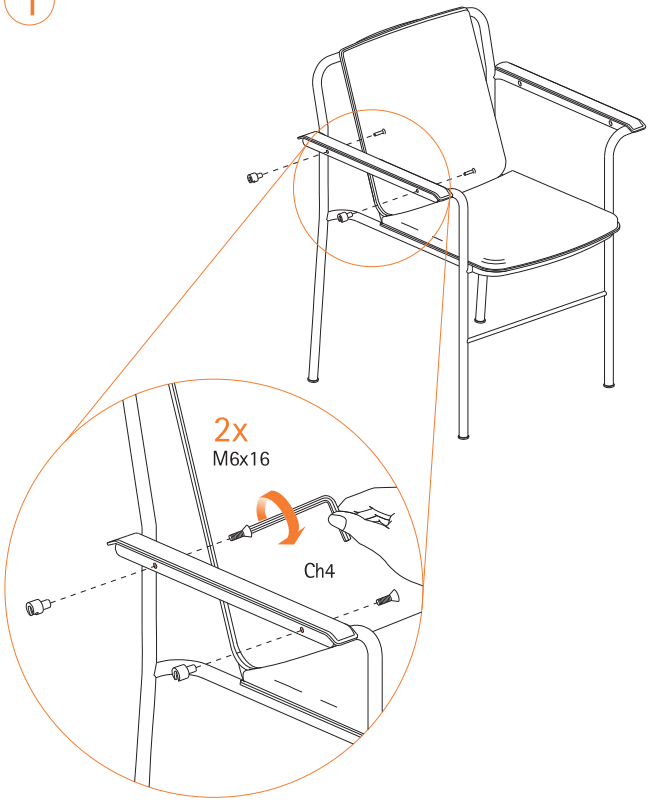

2

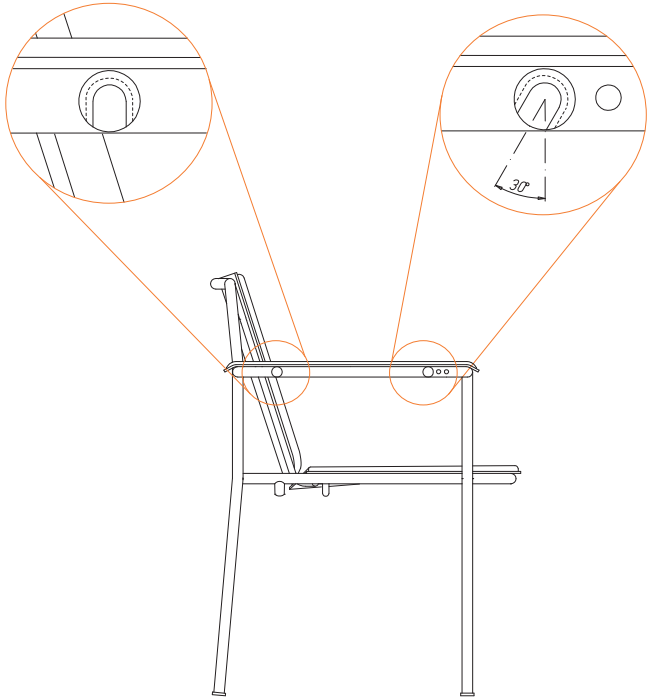

3

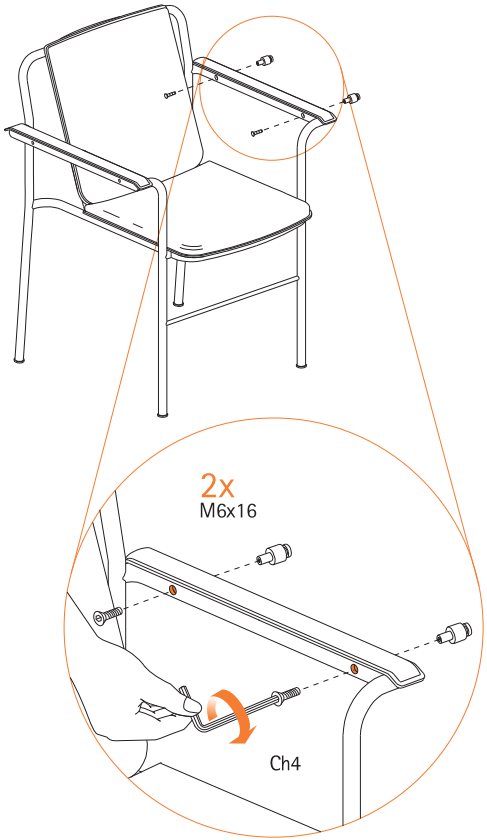

4

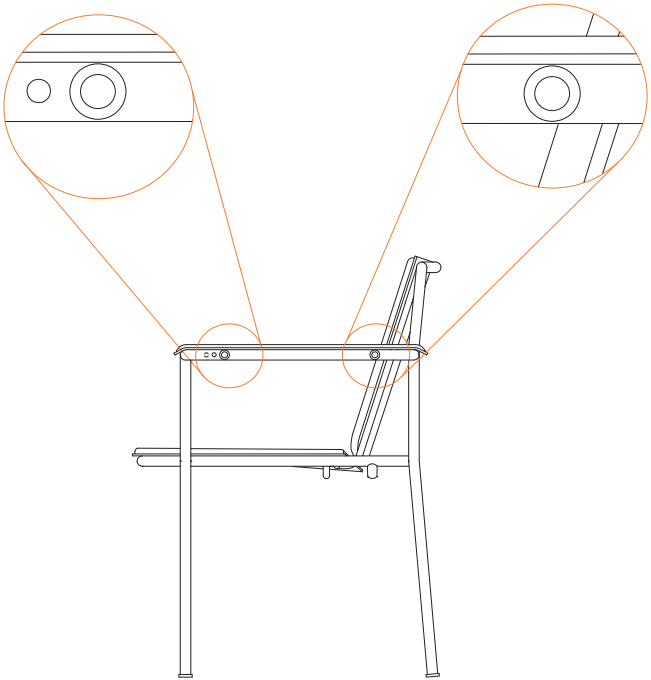

5

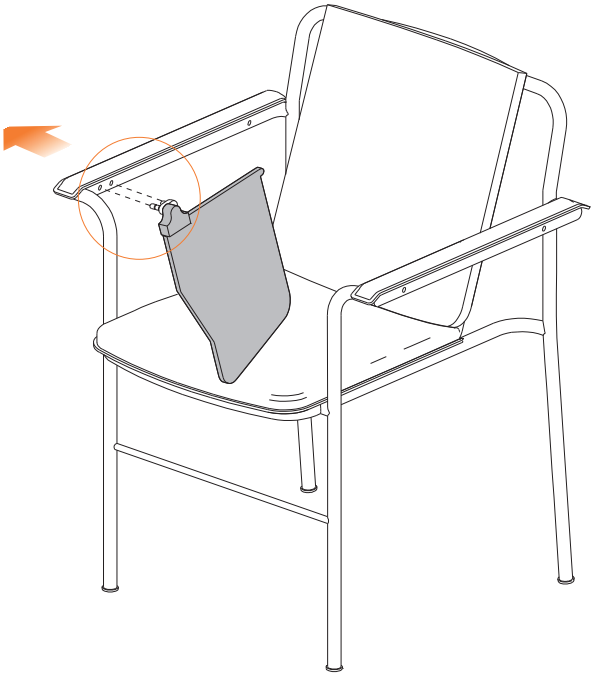

6

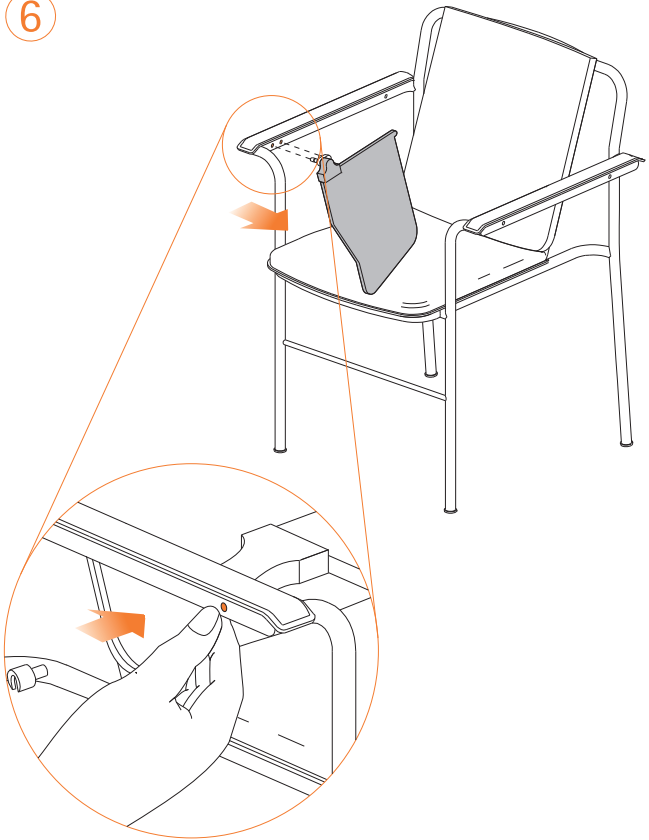

7

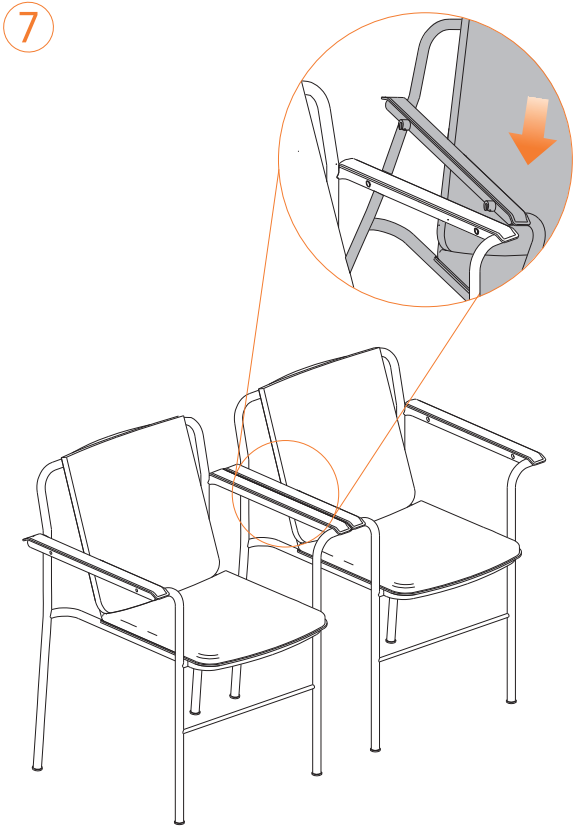

8

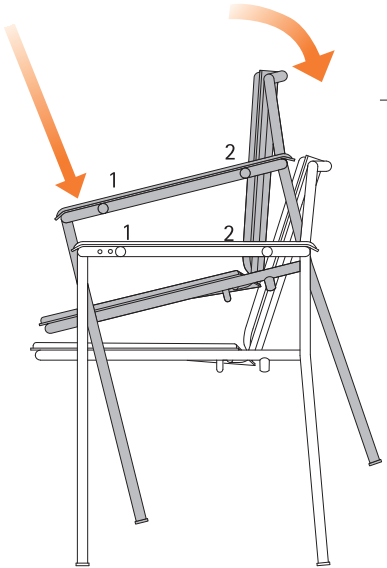

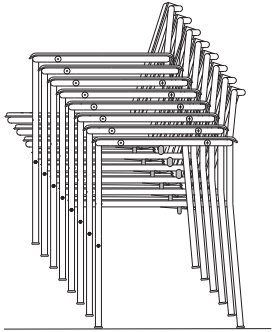

119780

©Poltrona Frau 2012. Company with Quality System certificate according to ISO 9001 and ISO 14001.

Poltrona Frau S.p.A. I - 62029 Tolentino S.S. 77 km 74.500 Tel. +39 0733 909.1 Fax +39 0733 971600 www.poltronafrau.it info@poltronafrau.it